A reverse acting, two-pipe thermostat is required. Damper is normally closed. Optional reheat control will require a normally closed hot water valve or a normally open P.E. switch. All air to room flows through the fan. The thermostat modulates the cold air damper. Unit fan draws air either from the cold duct or the ceiling plenum to maintain a desired room temperature. If warm plenum air fails to satisfy load, an optional electric heater or hot water coil valve is energized. An air pressure switch deenergizes the unit fan when the central system is shut down. The thermostat will override this switch and start the unit fan on a call for heating.

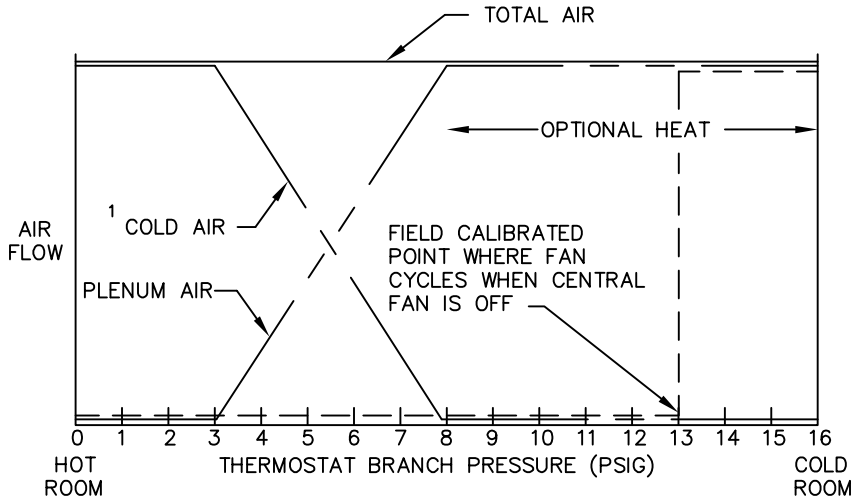

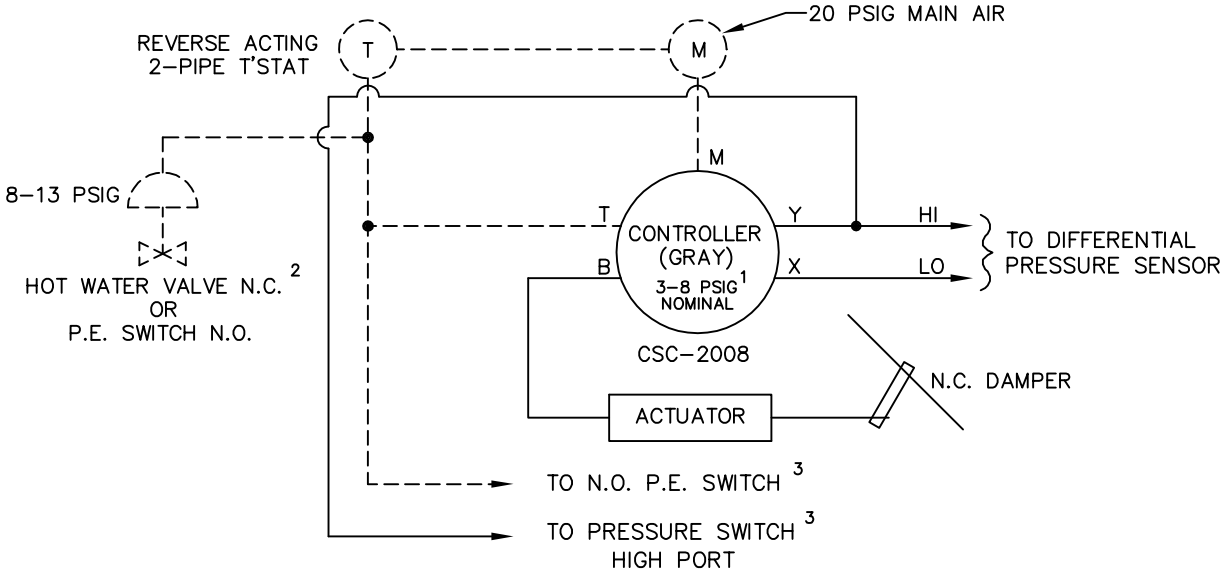

1 CONTROLLER REQUIRES FIELD CALIBRATION AND SET UP UNLESS OTHERWISE SPECIFIED. CONTROLLER RESET RANGE WILL VARY WITH AIR FLOW LIMITS.

2 HOT WATER VALVE SUPPLIED BY OTHERS. P.E. SWITCH IS INCLUDED IN ELECTRIC HEATER (IF APPLICABLE).

3 REFER TO MOTOR WIRING DIAGRAM OR ELECTRIC HEAT DIAGRAM (IF APPLICABLE).

——— FACTORY PIPING - - - - FIELD PIPING —·—·— FACTORY WIRING

PNEUMATIC AIR CONSUMPTION 0.5 SCFH

Johnson Controls	TITLE: FC405R PRESSURE INDEPENDENT PNEUMATIC CONTROLS	DRN BY: NANCE	DATE: 4/23/93		DRAWING NO. 16251
	THIS DRAWING CONTAINS PROPRIETARY DATA. UNAUTHORIZED DISCLOSURE, REPRODUCTION, OR USE IS STRICTLY PROHIBITED WITHOUT WRITTEN PERMISSION	CKD BY: WAE	DATE: 08/12/08	REV: 05	

UNCONTROLLED WHEN PRINTED